P33-3

Output Ratings

Voltage, Frequency	Prime	Standby
400V, 50 Hz	30.0 kVA / 24.0 kW	33.0 kVA / 26.4 kW
480V, 60 Hz	33.8 kVA / 27.0 kW	37.5 kVA / 30.0 kW

Ratings at 0.8 power factor.
Please refer to the output ratings technical data section for specific generator set outputs per voltage.

Prime Rating
These ratings are applicable for supplying continuous electrical power (at variable load) in lieu of commercially purchased power. There is no limitation to the annual hours of operation and this model can supply 10% overload power for 1 hour in 12 hours.

Standby Rating
These ratings are applicable for supplying continuous electrical power (at variable load) in the event of a utility power failure. No overload is permitted on these ratings. The alternator on this model is peak continuous rated (as defined in ISO 8528-3).

Standard Reference Conditions
Note: Standard reference conditions 25°C (77°F) Air Inlet Temp, 100m (328 ft) A.S.L. 30% relative humidity.
Fuel consumption data at full load with diesel fuel with specific gravity of and conforming to BS2869: 1998, Class A2.

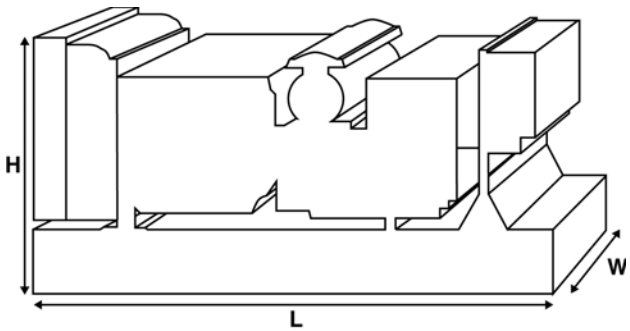

Ratings and Performance Data

Engine Make & Model:		Perkins® 1103A-33G1	
Alternator manufactured for FG Wilson by:		Marelli	
Alternator Model:		MJB 160 MB4	
Control Panel:		DCP-10	
Base Frame:		Heavy Duty Fabricated Steel	
Circuit Breaker Type:		3 Pole MCB	
Frequency:		50 Hz	60 Hz
Engine Speed: RPM		1500	1800
Fuel Tank Capacity: litres (US gal)		71 (18.8)	
Fuel Consumption: l/hr (US gal/hr)			
(100% Load)	- Prime	6.9 (1.8)	8.1 (2.1)
	- Standby	7.7 (2.0)	9.1 (2.4)

Available Options

FG Wilson offer a range of optional features to tailor our generator sets to meet your power needs. Options include:

- Upgrade to CE Certification
- A wide range of Sound Attenuated Enclosures
- A variety of generator set control and synchronising panels
- Additional alarms and shutdowns
- A selection of exhaust silencer noise levels

For further information on all of the standard and optional features accompanying this product please contact your local Dealer or visit: www.FGWilson.com

Dimensions and Weights

Length (L) mm (in)	Width (W) mm (in)	Height (H) mm (in)	Dry kg (lb)	Wet kg (lb)
1570 (61.8)	760 (29.9)	1229 (48.4)	699 (1541)	712 (1570)

Dry = With Lube Oil Wet = With Lube Oil and Coolant

Ratings in accordance with ISO 8528, ISO 3046, IEC 60034, BS5000 and NEMA MG-1.22.
Generator set pictured may include optional accessories.

Engine Technical Data	
No. of Cylinders / Alignment:	3 / In Line
Cycle:	4 Stroke
Bore / Stroke: mm (in)	105.0 (4.1)/127.0 (5.0)
Induction:	Naturally Aspirated
Cooling Method:	Water
Governing Type:	Mechanical
Governing Class:	ISO 8528 G2
Compression Ratio:	19.25:1
Displacement: l (cu. in)	3.3 (201.4)
Moment of Inertia: kg m² (lb/in²)	1.14 (3896)
Engine Electrical System:	
- Voltage / Ground	12/Negative
- Battery Charger Amps	65
Weight: kg (lb) - Dry	412 (908)
- Wet	430 (948)

Performance	50 Hz	60 Hz
Engine Speed: rpm	1500	1800
Gross Engine Power: kW (hp)		
- Prime	28.2 (38.0)	33.1 (44.0)
- Standby	31.0 (42.0)	36.5 (49.0)
BMEP: kPa (psi)		
- Prime	684.0 (99.2)	669.0 (97.0)
- Standby	752.0 (109.0)	738.0 (107.0)

Fuel System

Fuel Filter Type: Replaceable Element

Recommended Fuel: Class A2 Diesel or BSEN590

Fuel Consumption: l/hr (US gal/hr)

Prime	110% Load	100% Load	75% Load	50% Load
50 Hz	7.7 (2.0)	6.9 (1.8)	5.2 (1.4)	3.8 (1.0)
60 Hz	9.1 (2.4)	8.1 (2.1)	6.2 (1.6)	4.7 (1.2)

Standby	100% Load	75% Load	50% Load
50 Hz	7.7 (2.0)	5.7 (1.5)	4.1 (1.1)
60 Hz	9.1 (2.4)	6.8 (1.8)	5.0 (1.3)

(Based on diesel fuel with a specific gravity of 0.85 and conforming to BS2869, Class A2)

Air Systems		50 Hz	60 Hz
Air Filter Type:		Replaceable Element	
Combustion Air Flow: m³/min (cfm)			
	- Prime	2.2 (76)	2.6 (92)
	- Standby	2.2 (76)	2.6 (91)
Max. Combustion Air Intake Restriction: kPa (in H_2O)		6.5 (26.1)	6.5 (26.1)

Cooling System		50 Hz	60 Hz
Cooling System Capacity: l (US gal)		10.2 (2.7)	10.2 (2.7)
Water Pump Type:		Centrifugal	
Heat Rejected to Water & Lube Oil:			
kW (Btu/min)	- Prime	16.0 (910)	18.0 (1024)
	- Standby	18.0 (1024)	22.0 (1251)
Heat Radiation to Room: Heat radiated from engine and alternator			
kW (Btu/min)	- Prime	8.1 (461)	8.8 (500)
	- Standby	9.8 (557)	10.4 (591)
Radiator Fan Load: kW (hp)		0.3 (0.4)	0.5 (0.7)
Radiator Cooling Airflow: m³/min (cfm)		62.6 (2211)	84.8 (2995)
External Restriction to Cooling Airflow: Pa (in H_2O)		125 (0.5)	125 (0.5)

Designed to operate in ambient conditions up to 50°C (122°F).
Contact your local FG Wilson Dealer for power ratings at specific site conditions.

Lubrication System	
Oil Filter Type:	Spin-On, Full Flow
Total Oil Capacity: l (US gal)	8.3 (2.2)
Oil Pan: l (US gal)	7.8 (2.1)
Oil Type:	API CG4 / CH4 15W-40
Oil Cooling Method:	Water

Exhaust System		50 Hz	60 Hz
Maximum Allowable Back Pressure: kPa (in Hg)		8.0 (2.4)	10.0 (3.0)
Exhaust Gas Flow: m³/min (cfm)			
	- Prime	5.7 (201)	6.4 (226)
	- Standby	5.8 (205)	6.6 (233)
Exhaust Gas Temperature: °C (°F)			
	- Prime	500 (932)	520 (968)
	- Standby	520 (968)	530 (986)

Alternator Physical Data	
Manufactured for FG Wilson by:	Marelli
Model:	MJB 160 MB4
No. of Bearings:	1
Insulation Class:	H
Winding Pitch Code:	2/3 - M0
Wires:	12
Ingress Protection Rating:	IP23
Excitation System:	SHUNT
AVR Model:	Mark V

Alternator Operating Data	
Overspeed: rpm	2250
Voltage Regulation: (Steady state)	+/- 1.0%
Wave Form NEMA = TIF:	50
Wave Form IEC = THF:	2.0%
Total Harmonic content LL/LN:	2.0%
Radio Interference:	Suppression is in line with European Standard EN55011
Radiant Heat: kW (Btu/min)	
- 50 Hz	3.8 (216)
- 60 Hz	4.4 (250)

Alternator Performance Data:	50 Hz				60 Hz			
Data Item	415/240V	400/230V 230/115V 200/115V	380/220V 220/110V	220/127V	480/277V 240/139V	380/220V 220/110V	240/120V 208/120V	440/254V 220/127V
Motor Starting Capability* kVA	45	45	38	58	39	32	38	39
Short Circuit Capacity %	-	-	-	-	-	-	-	-
Reactances: Per Unit								
Xd	2.390	2.570	2.840	2.120	2.410	2.850	3.210	2.870
X'd	0.220	0.230	0.260	0.190	0.220	0.330	0.290	0.260
X"d	0.093	0.100	0.111	0.083	0.094	0.141	0.125	0.112

Reactances shown are applicable to prime ratings.
*Based on 30% voltage dip at 0 power factor.

Output Ratings Technical Data 50 Hz				
Voltage	Prime:		Standby:	
	kVA	kW	kVA	kW
415/240V	30.0	24.0	33.0	26.4
400/230V	30.0	24.0	33.0	26.4
380/220V	30.0	24.0	33.0	26.4
230/115V	30.0	24.0	33.0	26.4
220/127V	30.0	24.0	33.0	26.4
220/110V	30.0	24.0	33.0	26.4
200/115V	30.0	24.0	33.0	26.4

Output Ratings Technical Data 60 Hz				
Voltage	Prime:		Standby:	
	kVA	kW	kVA	kW
480/277V	33.8	27.0	37.5	30.0
220/127V	33.8	27.0	37.5	30.0
380/220V	31.8	25.4	35.0	28.0
240/120V	33.8	27.0	37.2	29.8
440/254V	33.8	27.0	37.5	30.0
220/110V	31.8	25.4	35.0	28.0
208/120V	33.8	27.0	37.2	29.8
240/139V	33.8	27.0	37.5	30.0

General Information

Documentation

A full set of operation and maintenance manuals and circuit wiring diagrams.

Generator Set Standards

The equipment meets the following standards: BS5000, ISO 8528, ISO 3046, IEC 60034, NEMA MG-1.22.

FG Wilson is a fully accredited ISO 9001 company.

Warranty

All prime equipment carries a one year manufacturer's warranty. Standby equipment, limited to 500 running hours per year, has a two year manufacturer's warranty. For details on warranty cover please contact your local Dealer, or visit our website: FGWilson.com.

Dealer contact details:

DPX Power
Oostelijke Randweg 20 (Port Nr 114)
4782 PZ – Moerdijk
The Netherlands

www.dpxpower.nl
sales@dpxpower.nl
0031-649905691
0031-631698138

FG Wilson manufactures product in the following locations:
Northern Ireland • Brazil • China • India • USA

With headquarters in Northern Ireland, FG Wilson operates through a Global Dealer Network.
To contact your local Sales Office please visit the FG Wilson website at www.FGWilson.com.

FG Wilson is a trading name of Caterpillar (NI) Limited.

In line with our policy of continuous product development, we reserve the right to change specification without notice.

P33-3/4PP/0414/GB